http://wangyuren.blog.dianyuan.com/

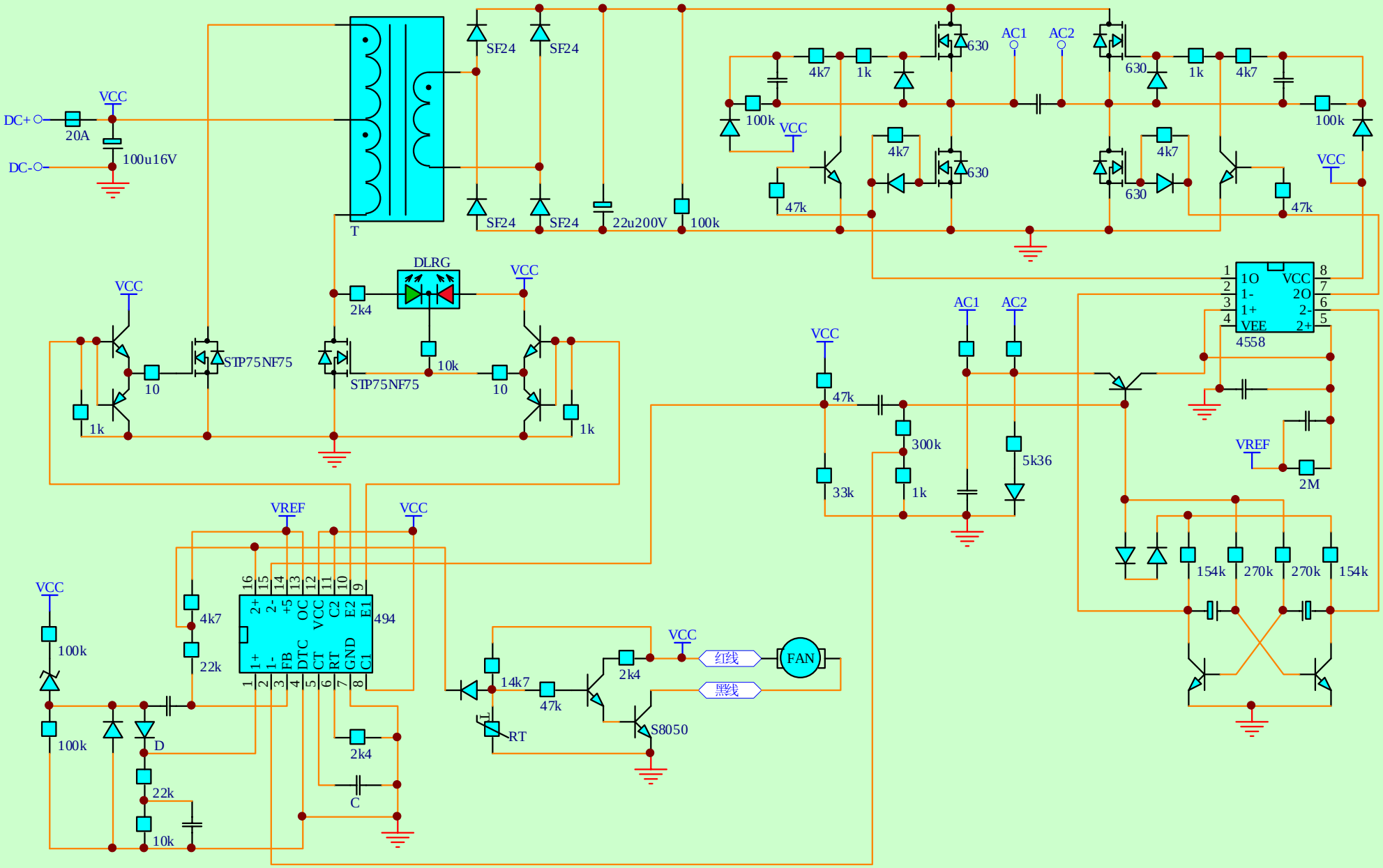

http://wangyuren.blog.dianyuan.com/